IEEE ISIE 2005, June 20-23, 2005, Dubrovnik, Croatia

Analysis of Bilateral Systems with Time Delay

Kenji Natori*, Seiichiro Katsura*, Toshiaki Tsuji* and Kouhei Ohnishi*
*Department of System Design Engineering, Keio University, 3-14-1, Hiyoshi, Kouhoku, Yokohama, Japan

***Abstract*— Bilateral control is an effective method for reproduction of tactile sense. Therefore many researches have been conducted so far. That is about not only stability but also performance.**

In this paper, one of evaluation indices of bilateral systems, "Transparency" is applied to the case with time delay. Both master and slave site of the system used in this research come with acceleration control system by disturbance observer. Therefore the system is very robust to disturbance and parameter variation. The relation of force and position information of both master and slave is formulated using hybrid matrix. Then frequency responses of the elements of hybrid matrix are analyzed taking bandwidth of disturbance observer and reaction force observer, time delay into account. From those frequency responses, it is found out that there exists unfamiliar phenomenon (an infinite number of resonances) induced by the dimensionless characteristic of time delay. Therefore the relation of time delay and the phenomenon is discussed and clarified using Pade approximation. Then using the result, new stabilization method is proposed. It is based on phase-lead compensation.

I. Introduction

At the present day, because of tremendous development of information technology, visual information (sense) and auditory information (sense) are very common. This information is transmitted all over the world. In such a situation, haptic information (tactile sense) has been fascinating as a new media. To realize the reproduction of vivid tactile sense, real time processing technology is necessary. Therefore it was very difficult to implement tactile transmission system. However, recent progress of processing technology is making it possible to realize the implementation of haptic reproduction system.

The most popular control method for reproduction of tactile sense is bilateral control (master - slave system.) In bilateral control systems, environmental information like position value and force value is transmitted bi-directionally. Therefore operator can feel the tactile sense of the environment. Furthermore extension of the distance between master and slave is attempted. In other words, teleoperation is attracting much attention. However it is too difficult to get the tactile sense of the remote environment. There exists very serious problem. It is time delay.

Time delay exists in any physical systems and induces phase delay of the system. If it is larger than certain value (particularly in case of communication systems), the system may become unstable. Furthermore, one of the difficulty is that time delay has troubling character from the view point of mathematical issue (it is dimensionless term.) It is typical example of nonminimum phase system. Therefore many researches have treated this troubling problem.

The first systemized theory about bilateral system with time delay (bilateral teleoperation system) for stability is by Anderson and Spong[1]. They treated stability of systems from the perspective of passivity and proposed scattering theory. Later, many researches of stability applied passivity to assure stability in teleoperation systems. Then Niemeyer and Slotine proposed wave variables from the concept of passivity[2]. On the other hand, viewed from the perspective of the performance of bilateral systems, the most famous evaluation index is transparency. Hannaford applied hybrid two-port model to teleoperator and discussed ideal performance[3]. Lawrence analyzed bilateral systems from the perspective of both transparency and stability[4]. Furthermore the analysis was extended to the system with time delay. Hashtrudi-Zaad discussed transparency of the system with time delay and made out the effectiveness of local force feedback[5].

In this paper, transparency of a bilateral system with time delay will be analyzed using frequency response. The system used in this research comes with acceleration control system by disturbance observer in both master and slave systems. Furthermore reaction force observer is adopted for sensing reaction force. From the results of frequency response, the relation between bandwidth of force or position transmission and bandwidth of disturbance observer or reaction force observer, and the relation between bandwidth of position or force transmission and the amount of delay time are clarified. Moreover it is found out that there exists characteristic phenomenon. The frequency response has an infinite number of peak value (or resonances.) It comes from dimensionless property of time delay. The relation between the phenomenon and the property of time delay is clarified by frequency response using Pade approximation. Furthermore, taking the characteristic property into account, new stabilization method is proposed. It is based on phase-lead compensation and is evaluated by root locus.

This paper is organized as follows: in section II, the concept of transparency is introduced briefly. Hybrid matrix that connects environmental information of bilateral systems is presented and one of the definitions of transparency is described. Then in section III, at first acceleration control system by disturbance observer is explained and the method of sensorless force sensing is described. Then hybrid matrix of the bilateral system used in this research is derived. In section IV, effect of time delay is interpreted firstly and the frequency responses of the elements of derived hybrid matrix are shown. Then it is found out that there exists characteristic phenomenon (an infinite number of resonances.) This phenomenon is discussed in section V. The relation between the phenomenon and dimensionless property of time delay is

clarified by frequency response using Pade approximation. Furthermore new stabilization method is proposed. Finally in section VI, this paper is concluded.

II. Transparency

"Transparency" is one of useful evaluation indices of bilateral systems. Therefore many researchers have used it for analysis of bilateral systems. In this section, at first, one of its definitions will be introduced. Then it is formulated using hybrid matrix.

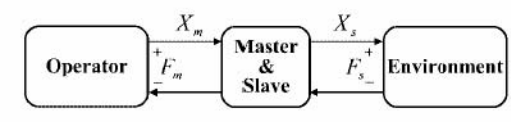

Fig. 1. Schematic diagram of bilateral systems

Fig. 1 shows the schematic diagram of bilateral systems. F_m is a force applied to master manipulator by operator. F_s indicates a force applied to environment from slave manipulator. X_m and X_s are the position information of master and slave, respectively. Then the relation of these four information is shown as below.

$$\begin{bmatrix} F_m \\ X_s \end{bmatrix} = \begin{bmatrix} H_{11} & H_{12} \\ H_{21} & H_{22} \end{bmatrix} \begin{bmatrix} X_m \\ F_s \end{bmatrix} \tag{1}$$

Here this matrix is called hybrid matrix. Using hybrid matrix, transparency is formulated. There are many definitions of transparency. Therefore one of those definitions is introduced here.

[Definition] Perfect correspondence of force and position information

This definition means perfect correspondence of force and position information between master and slave. The relation is shown as follows.

$$X_m = X_s \tag{2}$$

$$F_m = -F_s \tag{3}$$

Here difference of the sign of force information comes from the law of action and reaction.

In this case, hybrid matrix is shown as the next equation.

$$\begin{bmatrix} H_{11} & H_{12} \\ H_{21} & H_{22} \end{bmatrix} = \begin{bmatrix} 0 & -1 \\ 1 & 0 \end{bmatrix} \tag{4}$$

III. Bilateral System with Time Delay

In this section, a bilateral system with time delay used in this research is introduced. At first, acceleration control system by disturbance observer is interpreted and sensorless force sensing method using reaction force observer is described. Then bilateral system with time delay used in this research is explained. Finally hybrid matrix of the system is derived.

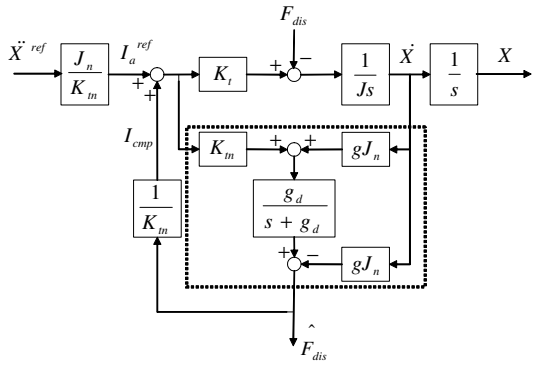

Fig. 2. Disturbance observer

A. Acceleration Control System

In the system used in this research, acceleration control system by disturbance observer is applied to the system of both master and slave side. Therefore in this section, brief introduction of disturbance observer is described at first. Then an acceleration control system is derived.

In Fig. 2, the part framed by dashed line is called disturbance observer. It estimates disturbance force (torque) using input current value and output velocity value. Here elements of the disturbance are shown as follows.

$$F_{dis} = F_{reac} + f + D\dot{X} + \Delta J\ddot{X} + \Delta K_t I_a^{ref} \tag{5}$$

F_{reac} : reaction force
f : Coulomb friction
$D\dot{X}$: viscous friction
$\Delta J\ddot{X} = (J - J_n)\ddot{X}$: force induced by inertia (mass) variation
$\Delta K_t I_a^{ref} = (K_{tn} - K_t)I_a^{ref}$: torque ripple
Then estimated disturbance is fed back and disturbance is compensated. If disturbance is completely compensated, Fig. 2 is transformed to Fig. 3. In other words, complete compensation is realized in case as below (bandwidth of disturbance observer is infinity.)

$$\frac{s}{s+g_d} \to 0 \quad (g_d \to \infty) \tag{6}$$

Here, it can be said that ideal acceleration control is

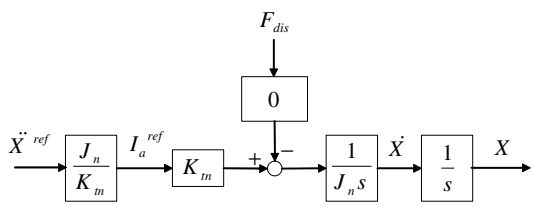

Fig. 3. Equivalent transformation of Fig. 2

realized.

B. Sensorless Force Sensing

In this research, force sensor is not used. Instead of that, reaction force observer is adopted. As described in (5), estimated disturbance includes reaction force and other elements. Therefore subtraction of other elements (Coulomb friction, viscous friction, and so on) leads to

the estimation of only reaction force. Fig. 4 shows the overview of reaction force estimation. Here, $F_{dis} - F_{reac}$

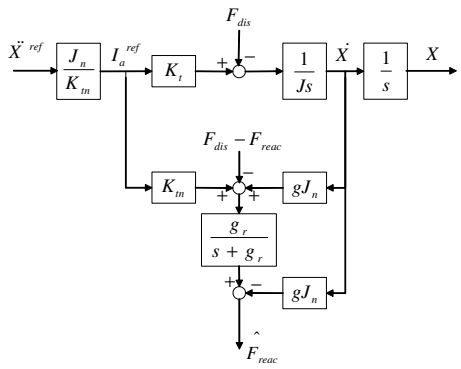

Fig. 4. Reaction force observer

is shown as below.

$$F_{dis} - F_{reac} = f + D\dot{X} + \Delta J\ddot{X} + \Delta K_t I_a^{ref} \tag{7}$$

C. Bilateral System with Time Delay

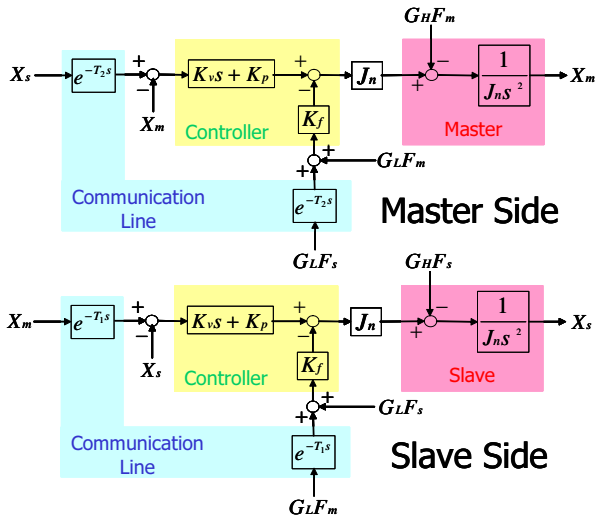

Fig. 5. A bilateral system with time delay

Fig. 5 is the bilateral system with time delay used in this research. Here G_H and G_L are as follows.

$$G_H(s) = \frac{s}{s+g_d} \tag{8}$$

$$G_L(s) = \frac{g_r}{s+g_r} \tag{9}$$

g_d : cutoff frequency of disturbance observer
g_r : cutoff frequency of reaction force observer
Descriptions of parameters and subscripts are shown in TABLE I. Then elements of hybrid matrix are derived as follows.

$$H_{11}(s) = \frac{C_p(s)^2(e^{-sT}-1) - (s^4 + 2C_p(s)s^2)}{D(s)}$$

$$H_{12}(s) = \frac{-(G_L K_f(s^2 + 2C_p(s)) + \frac{G_H}{Jn}C_p(s))e^{-sT_2}}{D(s)}$$

$$H_{21}(s) = \frac{(G_L K_f(s^2 + 2C_p(s)) + \frac{G_H}{Jn}C_p(s))e^{-sT_1}}{D(s)}$$

TABLE I
PARAMETERS AND SUBSCRIPTS

F	Force
X	Position
J	Inertia (Mass)
K_p	Position gain
K_v	Velocity gain
K_f	Force gain
$T_{1,2}$	One way delay time
$T = T_1 + T_2$	Round trip delay time
$_m(subscript)$	Master
$_s(subscript)$	Slave
$_n(subscript)$	Nominal value

$$H_{22}(s) = \frac{G_L^2 K_f^2(e^{-sT}-1) - (2\frac{K_f G_L G_H}{Jn} + \frac{G_H^2}{Jn^2})}{D(s)} \tag{10}$$

$$(C_p(s) = K_v s + K_p)$$

Here, $D(s)$ is shown as below.

$$D(s) = (s^2 + (K_v s + K_p)(1 + e^{-sT}))G_L K_f + \frac{G_H}{Jn}(s^2 + K_v s + K_p) \tag{11}$$

For the derivation of these equation, it is assumed that there are no disturbance except for operator's force and reaction force from environment.

IV. Analysis

In this section, effect of time delay in frequency domain is introduced at first. Then frequency responses of the elements of derived hybrid matrix are analyzed.

A. Effect of Time Delay

Laplace transform of a system with time delay $g(t-T)$ is indicated as below.

$$g(t-T) \quad \Longrightarrow \quad G(s)e^{-sT} \tag{12}$$

That is to say, the effect of time delay is shown as e^{-Ts} in Laplace domain. To consider the analysis of frequency response, 's' is set as $s = j\omega$. From the Euler's formula, time delay element is expanded as next equation.

$$e^{-j\omega T} = cos\omega T - jsin\omega T \tag{13}$$

Therefore the gain and phase are computed as follows.

$$|e^{-j\omega T}| = |cos\omega T - jsin\omega T| = 1 \tag{14}$$

$$\angle e^{-j\omega T} = -\omega T \tag{15}$$

As shown in these two equations, time delay does not affect the gain property. However it has serious effect for phase property. As angular frequency becomes larger, phase delay becomes larger without limit. It is very troubling characteristic. Time delay is one of common examples of non-minimum phase systems.

B. Frequency Response

In this section, frequency response of the elements of hybrid matrix derived in previous section is analyzed. From (1), H_{21} and H_{12} denote force and position transmission, respectively. Therefore both gains should be 0 [dB]. It is very intuitive. In addition, from (10), both gains are the same value. Hence in this paper, frequency response of $H_{21}(H_{12})$ is analyzed. The value of parameters are shown in TABLE II. Gain diagrams in case of $g_d = g_r = 100$ and $g_d = g_r = 500$ are shown in Fig. 6 and Fig. 7, respectively.

TABLE II
VALUE OF PARAMETERS

J_n	0.12 [kg]
K_p	900
K_v	60
K_f	3

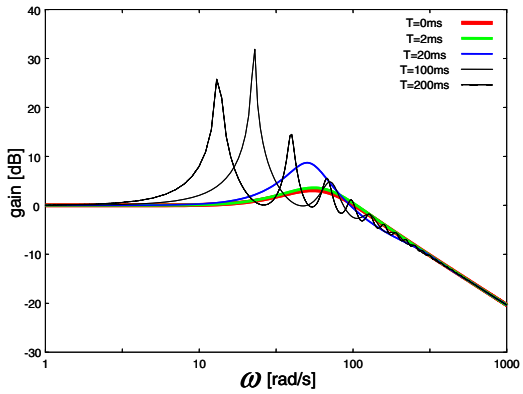

Fig. 6. Gain diagram of H_{21} or H_{12} ($g_d = g_r = 100$)

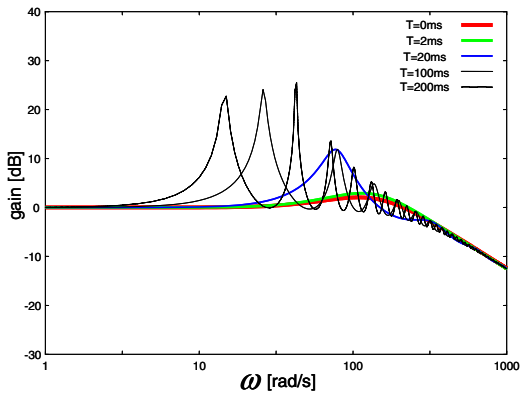

Fig. 7. Gain diagram of H_{21} or H_{12} ($g_d = g_r = 500$)

From Fig. 6 and Fig. 7, it is found out that the bandwidth of force or position transmission is nearly the same as that of disturbance observer (g_d) or reaction force observer (g_r). Furthermore there exist a lot of peak gains (or resonances.) The resonances occur at lower frequency as delay time becomes larger.

From these results, it can be found out that there exists remarkable phenomenon (an infinite number of resonances) in gain diagram. It is unfamiliar phenomenon. Therefore in next section, this phenomenon is discussed.

V. Discussion

In section IV, it is found out that gain diagram has an infinite number of resonances. It can be assumed that the phenomenon comes from dimensionless property of time delay. Therefore this section discusses the assumption. Then the assumption is verified by frequency response using Pade approximation. Furthermore new stabilization method based on discussed property is proposed. It is based on phase-lead compensation.

A. Characteristic Phenomenon

Ordinary second order system is formulated as below.

$$G(s) = \frac{\omega_n^2}{s^2 + 2\zeta\omega_n s + \omega_n^2} \tag{16}$$

ζ : damping coefficient
ω_n : natural angular frequency
Then magnitude of $G(s)$ becomes as below.

$$|G(j\omega)| = \frac{\omega_n^2}{\sqrt{\{\omega^2 - (1-2\zeta^2)\omega_n^2\}^2 + 4\zeta^2(1-\zeta^2)\omega_n^4}} \tag{17}$$

Therefore in case of $1-2\zeta^2 > 0$ i.e. $\zeta < 1/\sqrt{2}$, magnitude of $G(s)$ results in peak value (M_p) when ω is as next equation.

$$\omega = \sqrt{1-2\zeta^2}\omega_n = \omega_p \tag{18}$$

Here ω_p is called "resonant angular frequency." Of course in case of higher order system, there exist larger number of ω_p (resonances.) However in Fig. 6 or Fig. 7, it is found out that there exists an infinite number of ω_p. In other words, an infinite number of resonances occur in those figures. Then it can be assumed that this phenomenon comes from dimensionless property of time delay.

Time delay is known as dimensionless term. Therefore if it is tried to approximate using Taylor expansion, it becomes infinity order polynomial as below.

$$e^{-Ts} = 1 - Ts + \frac{1}{2}T^2s^2 - \frac{1}{6}T^3s^3 + \cdots \tag{19}$$

In the denominator of the elements of hybrid matrix derived in this paper, there exists time delay term. Therefore it can be assumed that denominator and numerator of the elements consist of an infinite number of second order systems. That is shown as below.

$$H(s) = \frac{\Pi_{j=1}^{\infty}(s^2 + 2\zeta_{Nj}\omega_{Nnj}s + \omega_{Nnj}^2)}{\Pi_{i=1}^{\infty}(s^2 + 2\zeta_{Di}\omega_{Dni}s + \omega_{Dni}^2)} \tag{20}$$

Therefore there exist an infinite number of resonances.

B. Pade Approximation

To clarify the assumption described in previous section, Pade approximation is adopted in this section.

Second order Pade approximation is shown as below.

$$\begin{aligned} e^{-Ts} &= \frac{1 - \frac{1}{2}Ts + \frac{1}{12}T^2s^2}{1 + \frac{1}{2}Ts + \frac{1}{12}T^2s^2} \\ &= \frac{s^2 - \frac{6}{T}s + \frac{12}{T^2}}{s^2 + \frac{6}{T}s + \frac{12}{T^2}} \end{aligned} \tag{21}$$

Using this approximation, denominator and numerator of the elements of hybrid matrix become finite order polynomial. Therefore number of ω_p is supposed to be finite. Fig. 8 and Fig. 9 are frequency response using second

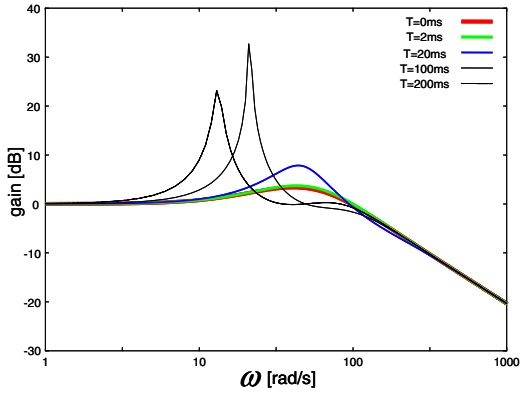

Fig. 8. Gain diagram of H_{21} or H_{12} ($g_d = g_r = 100$) using Pade approximation

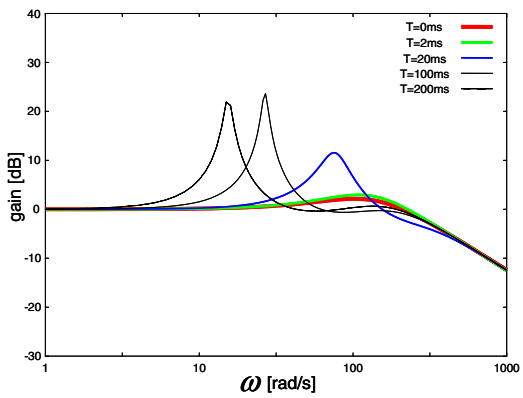

Fig. 9. Gain diagram of H_{21} or H_{12} ($g_d = g_r = 500$) using Pade approximation

order Pade approximation. From these figures, it is found out that the bandwidth of force or position transmission is nearly the same as that of disturbance observer (g_d) or reaction force observer (g_r). This property is just like Fig. 6 and Fig. 7. Furthermore the value of ω_p is almost the same as that of Fig. 6 and Fig. 7. On the other hand, the number of ω_p is reduced and becomes finite. It comes from adoption of Pade approximation. Accordingly the assumption about the causality of unfamiliar phenomenon described in previous section is clarified by these results.

C. Stabilization Method

In this section, new stabilization method based on the characteristic property of time delay described in previous section is proposed. For the stabilization, phase-lead compensation is introduced.

As described in previous section, elements of hybrid matrix of bilateral systems with time delay can be regarded like (20). Therefore it can be said that closed-loop transfer functions of bilateral systems with time delay also become like (20). Then discussion about stability based on closed-loop transfer function is developed here.

The characteristic equation of (16) is as follows.

$$s^2 + 2\zeta\omega_n s + \omega_n^2 = 0 \tag{22}$$

Therefore in case of $0 < \zeta < 1$, two poles (conjugate complex number) are computed as follows.

$$s = -\zeta\omega_n \pm j\omega_n\sqrt{1-\zeta^2} \tag{23}$$

Then pole locations in complex plane are shown in Fig. 10.

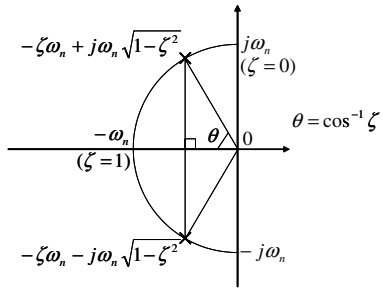

Fig. 10. Pole locations

From the relation of (18), ω_p becomes large in case that ω_n becomes large and ζ becomes small (of course $\zeta < 1/\sqrt{2}$.) In other words, the conditions for $\omega_p \to \infty$ are shown as follows.

$$\omega_n \longrightarrow \infty \tag{24}$$

$$\zeta \longrightarrow 0 \tag{25}$$

Considering geometric relation in complex plane shown in Fig. 10 and the relation of (26),

$$\theta = cos^{-1}\zeta \tag{26}$$

locations of poles and zeros close with imaginary axis asymptotically as ω_p becomes larger. The overview is shown in Fig. 11. Then it can be assumed that poles and

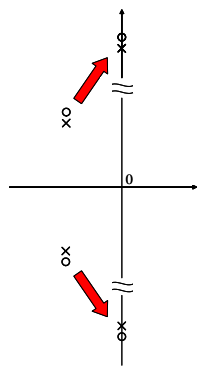

Fig. 11. Transition of poles and zeros

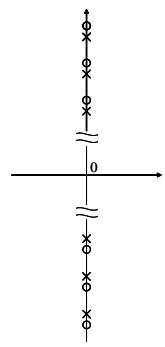

Fig. 12. Pole and zero locations

zeros that have extremely large or small imaginary part approximately lie on imaginary axis as shown in Fig. 12.

Pole and zero locations like this figure is the same as that of so-called reactance function. Here one of the methods to stabilize suchlike systems is phase-lead compensation. Phase-lead element is shown as below.

$$\frac{1+\alpha T_p s}{1+T_p s} \qquad (1 < \alpha) \tag{27}$$

If phase-lead compensation is implemented, root locus becomes as shown in Fig. 13. From Fig. 13, suchlike

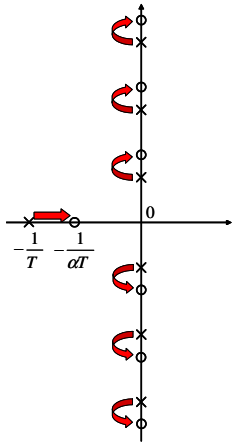

Fig. 13. Root locus

systems can be stabilized by the effectiveness of phase-lead compensation. Fig. 14 shows the step response of a bilateral system with no compensation for time delay. On the other hand, Fig. 15 shows the step response of a bilateral system with proposed method (phase-lead compensation.) In both cases, one way delay time is $100ms$.

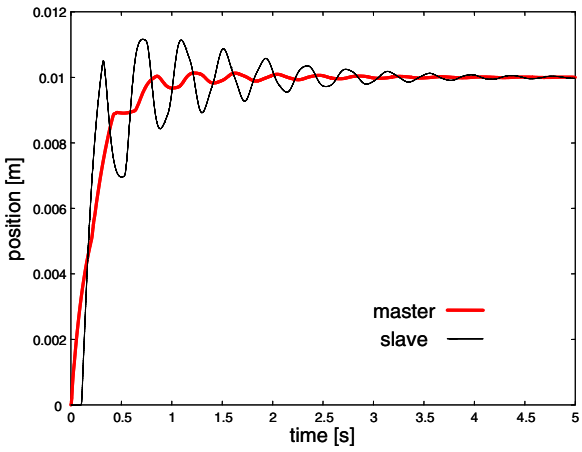

Fig. 14. Step response

From these two figures, it can be found out that an oscillation of slave position is dampened by proposed method. Therefore the validity of proposed method is verified. Althogh this method is for the portion of the factors of destabilization, it will be a new and effective method for analysis and design of systems with time delay.

VI. Conclusion

In this paper, hybrid matrix of a bilateral system with time delay was derived and analyzed using frequency response. This was for discussion about transparency. Then characteristic phenomenon coming from the property of time delay was discussed.

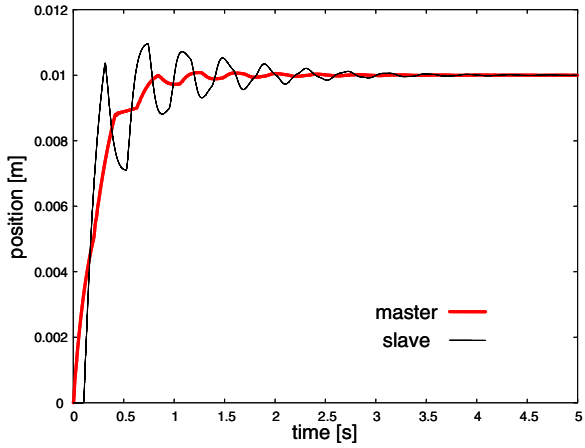

Fig. 15. Step response (proposed method)

The bilateral system used in this research came with an acceleration control system by disturbance observer. In other words, both master and slave systems were very robust to disturbance and parameter variation. Additionally, reaction force observer was applied for sensitive force sensing. It could be said that this bilateral system was an almost ideal system for reproduction of sensitive tactile sense. Therefore the main purpose of this research was to verify the relation between time delay and transparency. As a result, the effect of the bandwidth of disturbance observer and reaction force observer, and the amount of delay time were confirmed.

Furthermore, in the process of analysis, characteristic phenomenon (an infinite number of resonances) was found out. It could be assumed that the phenomenon came from dimensionless property of time delay. Then the assumption was clarified by the frequency response using Pade approximation. In addition, new stabilization method by phase-lead compensation was proposed. Although it was for the portion of the factors of destabilization, it can be said that the discussion is a new type of approach for stabilization of systems with time delay.

References

[1] R. J. Anderson, M. W. Spong "Bilateral Control of Teleoperators with Time Delay," IEEE Transactions on Automatic Control, Vol. 34, No. 5, pp.494–501, 1989.

[2] G. Niemeyer, J. E. Slotine "Stable Adaptive Teleoperation," IEEE Journal of Oceanic Engineering, Vol. 16, No. 1, pp.152–162, 1991.

[3] B. Hannaford, "A Design Framework for Teleoperators with Kinesthetic Feedback," IEEE Transactions on Robotics and Automation, Vol. 5, No. 4, pp.426–434, 1989.

[4] D. A. Lawrence, "Stability and Transparency in Bilateral Teleoperation," IEEE Transactions on Robotics and Automation, Vol. 9, No. 5, pp.624–637, 1993.

[5] K. Hashtrudi-Zaad, S. E. Salcudean, "Transparency in Time-Delayed Systems and the Effect of Local Force Feedback for Transparent Teleoperation," IEEE Transactions on Robotics and Automation, Vol. 18, No. 1, pp.108–114, 2002.

[6] K. Ohnishi, M. Shibata, T. Murakami, "Motion Control for Advanced Mechatronics," IEEE Transactions on Mechatronics, Vol. 1, No. 1, pp.56–67, 1996.

[7] W. Iida, K. Ohnishi, "Reproducibility and Operationality in Bilateral Teleoperation", Advanced Motion Control, AMC '04. The 8th IEEE International Workshop on, pp. 217 – 222, 25 – 28th March 2004.